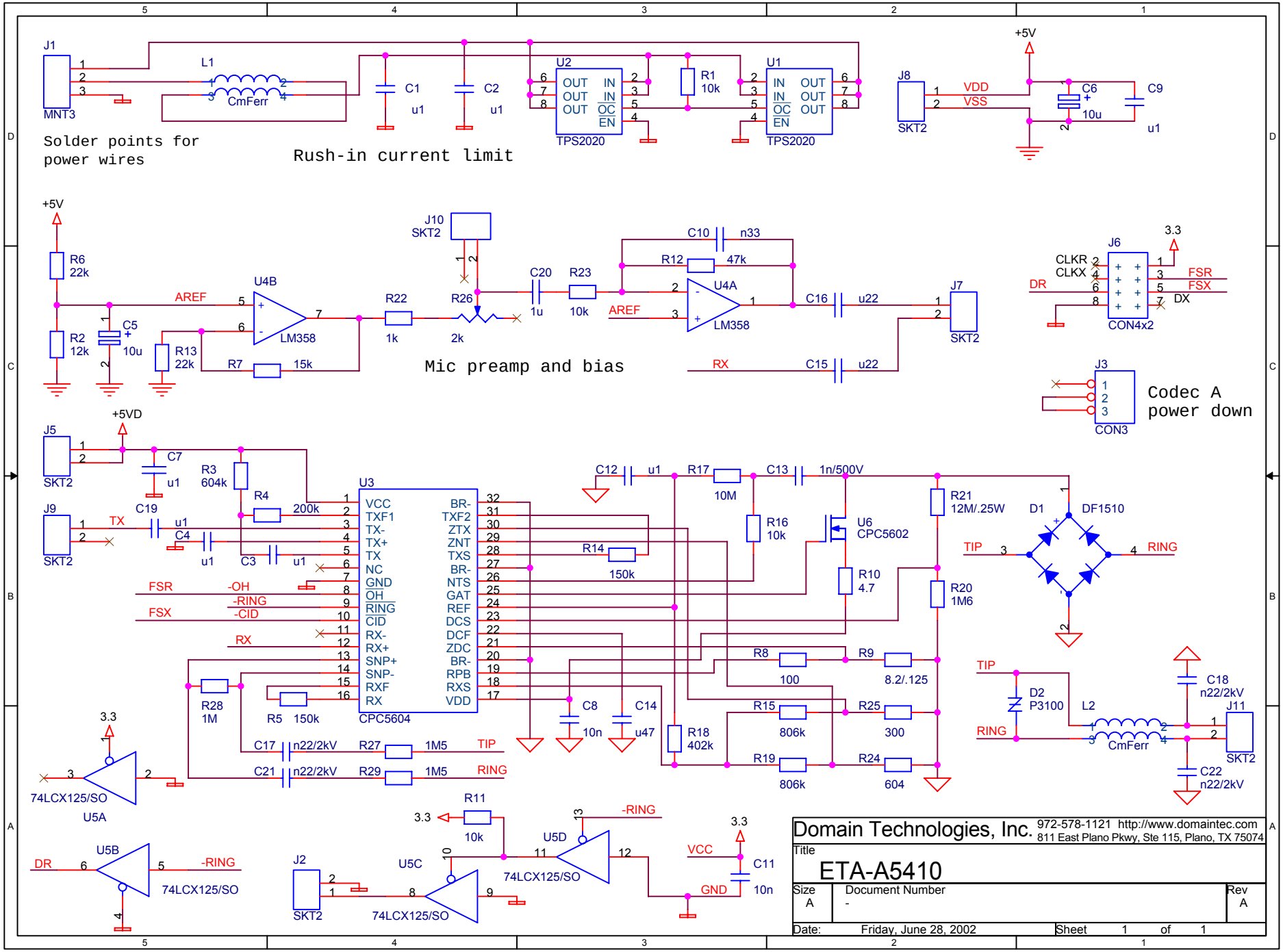

Domain Technologies, Inc. 972-578-1121 http://www.domaintec.com
811 East Plano Pkwy, Ste 115, Plano, TX 75074

Title
ETA-A5410

Size	Document Number	Rev
A	-	A

Date: Friday, June 28, 2002 Sheet 1 of 1