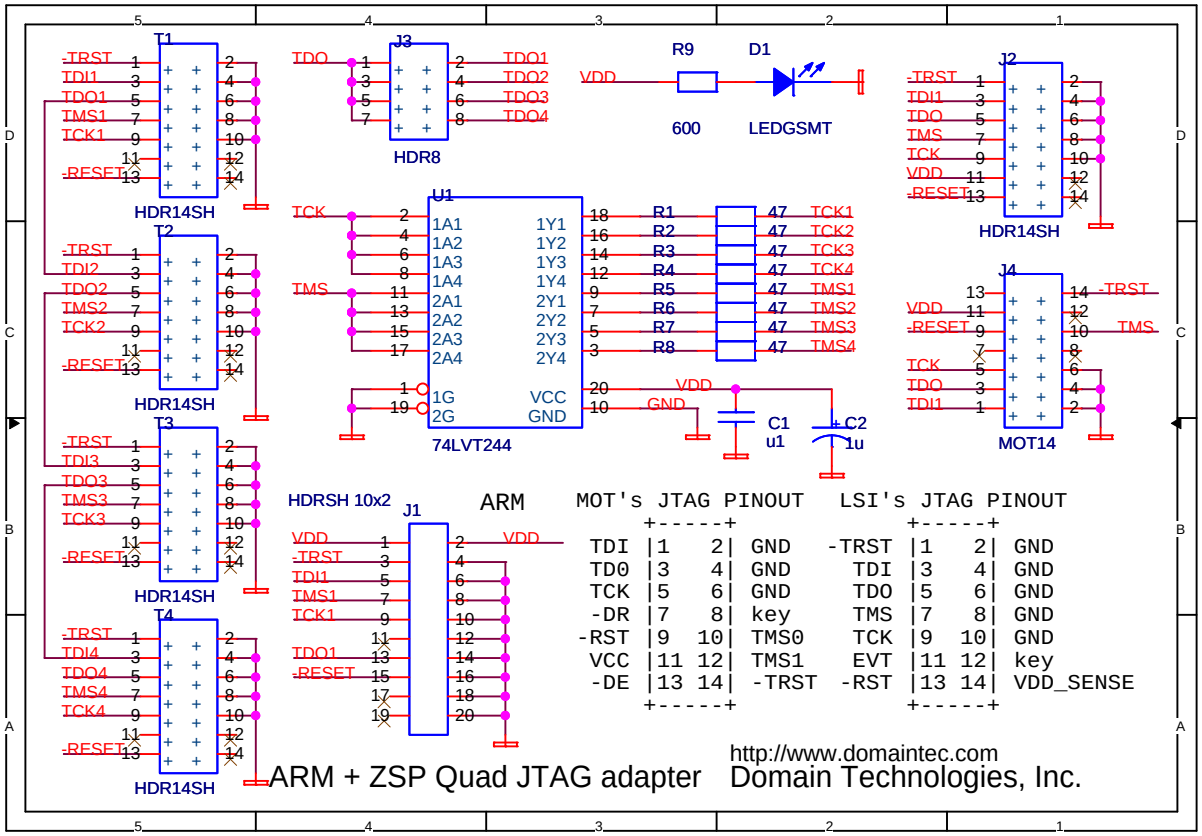
T1
HDR14SH
T2
HDR14SH
T3
HDR14SH
T4
HDR14SH
J3
HDR8
TDO
TDO1
TDO2
TDO3
TDO4
R9
600
D1
LEDGSMT
VDD
J2
HDR14SH
U1
74LVT244
TCK
TMS
R1
R2
R3
R4
R5
R6
R7
R8
TCK1
TCK2
TCK3
TCK4
TMS1
TMS2
TMS3
TMS4
C1
u1
C2
1u
J4
MOT14
HDRSH 10x2
J1
ARM
MOT's JTAG PINOUT
LSI's JTAG PINOUT
TDI |1 2| GND
TD0 |3 4| GND
TCK |5 6| GND
-DR |7 8| key
-RST |9 10| TMS0
VCC |11 12| TMS1
-DE |13 14| -TRST
-TRST |1 2| GND
TDI |3 4| GND
TDO |5 6| GND
TMS |7 8| GND
TCK |9 10| GND
EVT |11 12| key
-RST |13 14| VDD_SENSE
ARM + ZSP Quad JTAG adapter
http://www.domaintec.com
Domain Technologies, Inc.